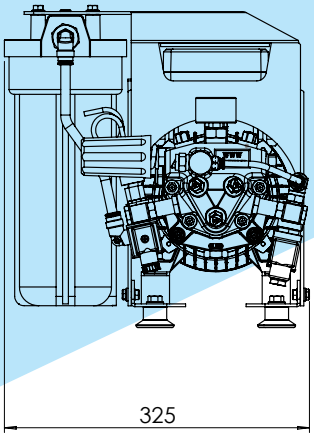
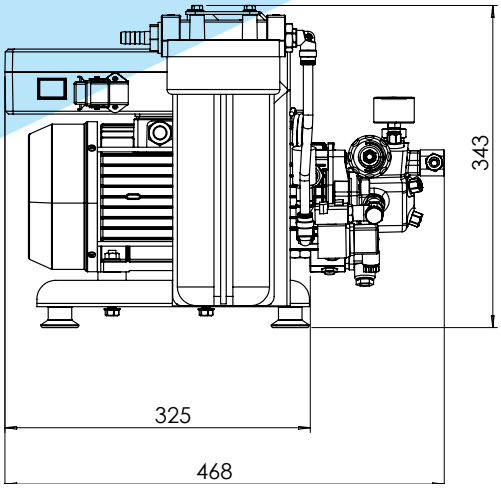




MADE IN ITALY

10 YEARS GUARANTEE - 10 YEAR GUARANTEE

TECHNICAL DATA

- SIMMM pump AXA model with no overheating system (CE approved)
- Patented flow rate valve (large range of nozzle numbers with the same model)
- Max working pressure up to 105 bar
- Professional gauge
- Water seals in viton
- Coated ceramic piston
- SS valves
- Safety water pressure switch (water loss)
- In line low pressure solenoid valve
- High pressure release solenoid valve
- “H” class motor with 900 rpm
- Thermal protection
- Lowest noise level 50 dB
- Low voltage control panel (12 volt)
- Radio remote control
- Digital cycling timer
- Pump and fan life time counter
- Pump overheating warning alarm
- Connection for remote control
- Modbus RS485 (BMS) connection
- Management by smartphone (available soon)
- External misting fan socket (230 volt-10 A)
- Painted steel frame
- Graphic alarm warning on display
- No water alarm
- Maintenance alarm
- Electric plug as standard
- 5 micron filter as standard



CYLING TIMER

REMOTE CONTROL

LIFE TIME PUMP/FAN

WEEKLY PROGRAM

OPERATING ALARMS

SMARTPHONE CONTROL

BMS - MODBUS RS485

MODEL	E346
PRESSIONE (BAR)	70-105
NOZZLES NUMBER (0.2 MM)	70
PUMP	SIMMM AXA
MIN FLOW RATE (LT/MIN)	1
MAX FLOW RATE (LT/MIN)	5
MOTOR SPEED (RPM)	900
VOLTAGE (VOLT)	230/115 50/60Hz.*
POWER (KW/H)	0.92
MAX DAILY USE (HOURS)	24
WEIGHT (KG)	28
DIMENSIONS LXHXP (CM)	47x32x34

* ON REQUEST